TP:ICs=Test point by IC pin socket.
Toggle SW: L=Lever Left, R=Lever Right

Cable usage note:
USB Type-C Plug to Plug cable without EMC connects only one CC signal line.
Check your Type-C cable following connections,
1. Which CC line side is connected each other.
2. Disconnected CC line is pulldowned by Ra, opened, or EMC circuit.
Connect two cables both receptacle side with connecting CC line on CC1 or CC2.

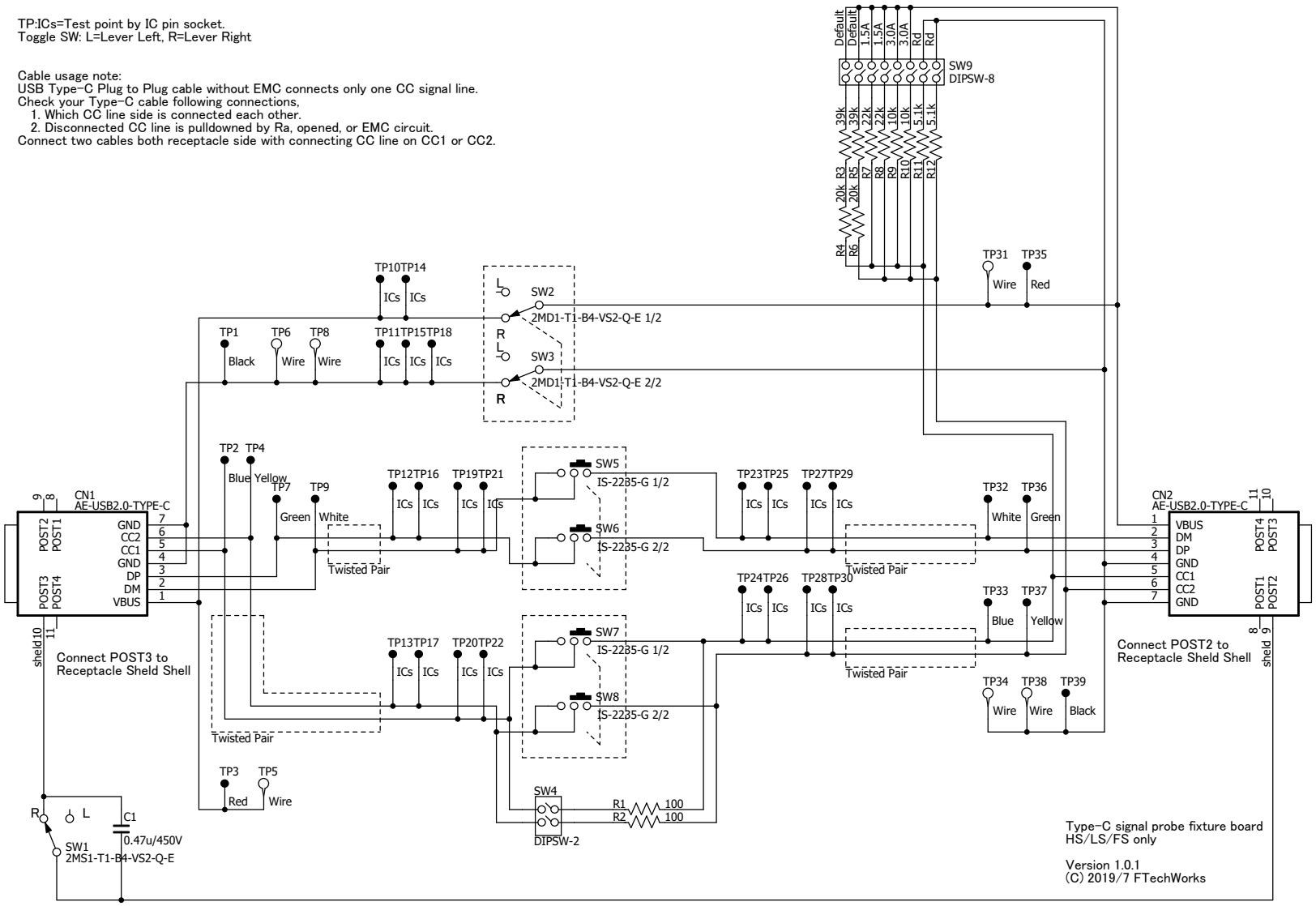

Type-C signal probe fixture board
HS/LS/FS only

Version 1.0.1
(C) 2019/7 FTechWorks