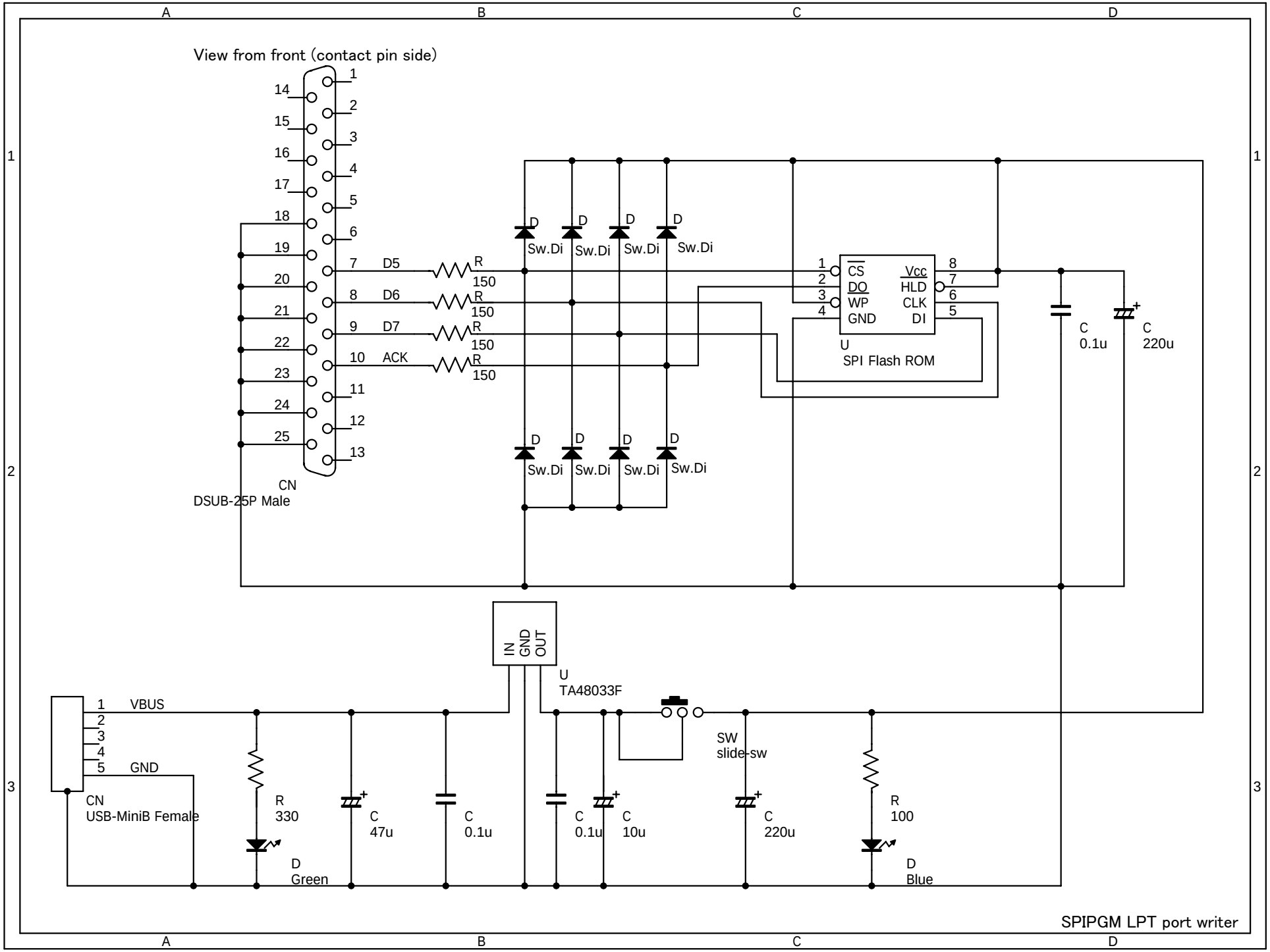
View from front (contact pin side)
CN
DSUB-25P Male
D5
D6
D7
ACK
R
150
D
Sw.Di
CS
DO
WP
GND
Vcc
HLD
CLK
DI
U
SPI Flash ROM
C
0.1u
C
220u
IN
GND
OUT
U
TA48033F
VBUS
GND
CN
USB-MiniB Female
R
330
D
Green
C
47u
C
0.1u
C
0.1u
C
10u
SW
slide-sw
C
220u
R
100
D
Blue
SPIPGM LPT port writer