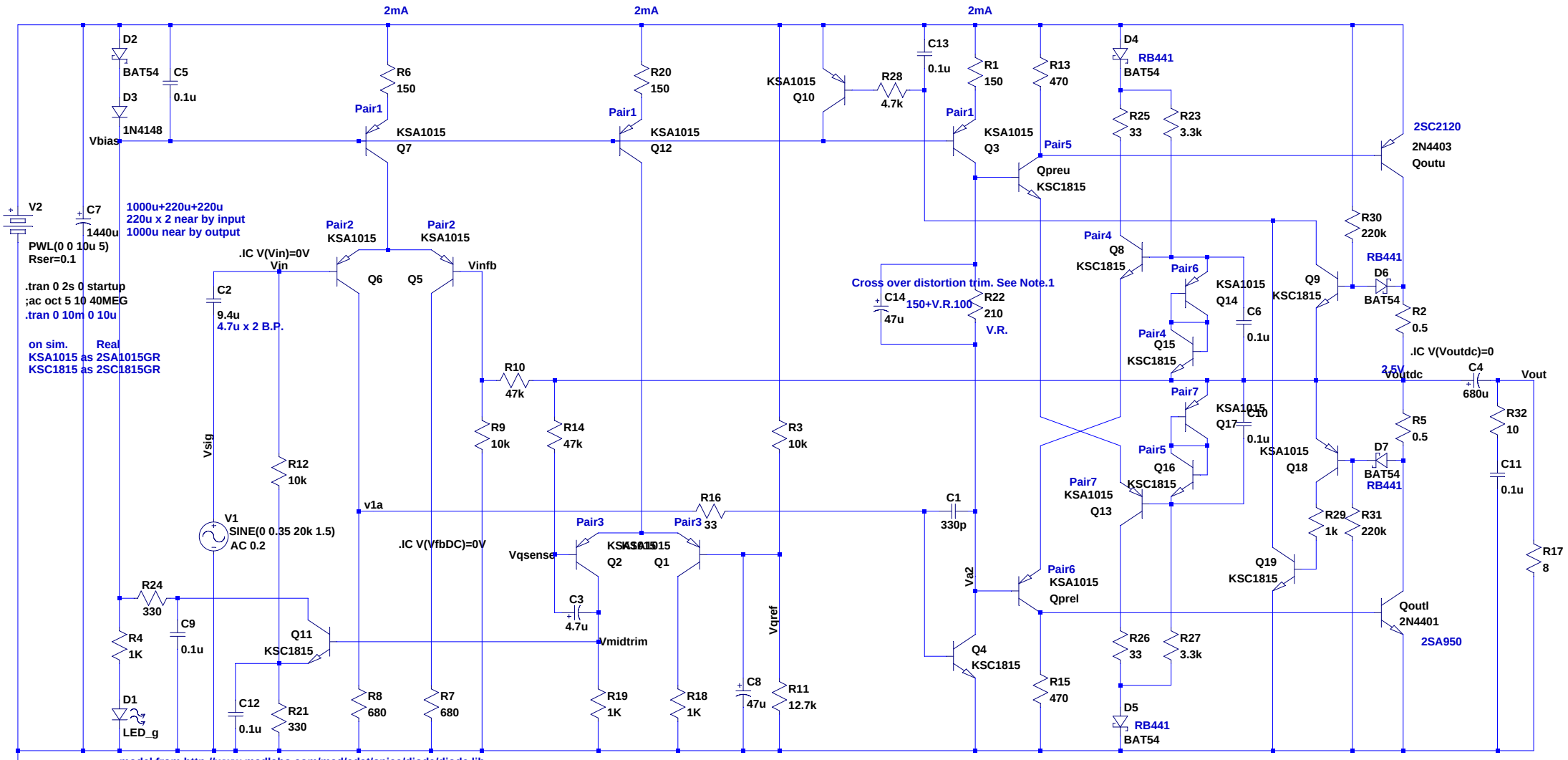

model from http://www.madlabo.com/mad/edat/spice/diode/diode.lib
.model LED_g D(IS=7.33e-15 N=2.645 RS=1.472 BV=15.0 IBV=0.5uA CJO=19pF Vj=0.6323 M=0.322 Iave=0.02 Vpk=4 type=LED mfg=standard)

To get KSA1015, KSC1815 model, visit following site, and click condition colum item.
http://www.fairchildsemi.com/models/PSPICE/Discrete/Small_Signal_TR.html

Note.1 In real circuit using 150+60 ohm as cross over distortion trim resistor, but this value makes large collector current at Qoutu and Qoutl in simulator.

--- D:\bsch\USBAudio\SmallAmp15_build_step2.asc ---