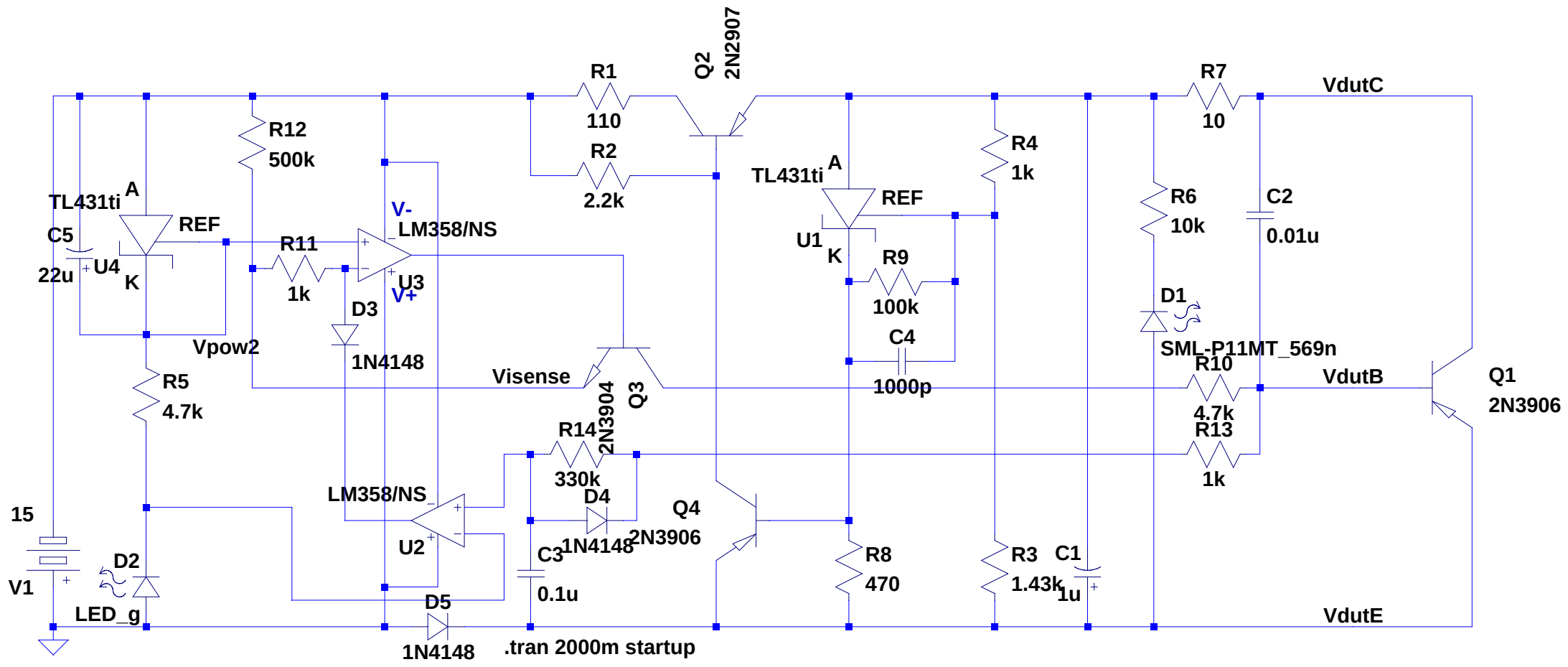


--- D:\bsch\HFE\hFE-P4.asc ---