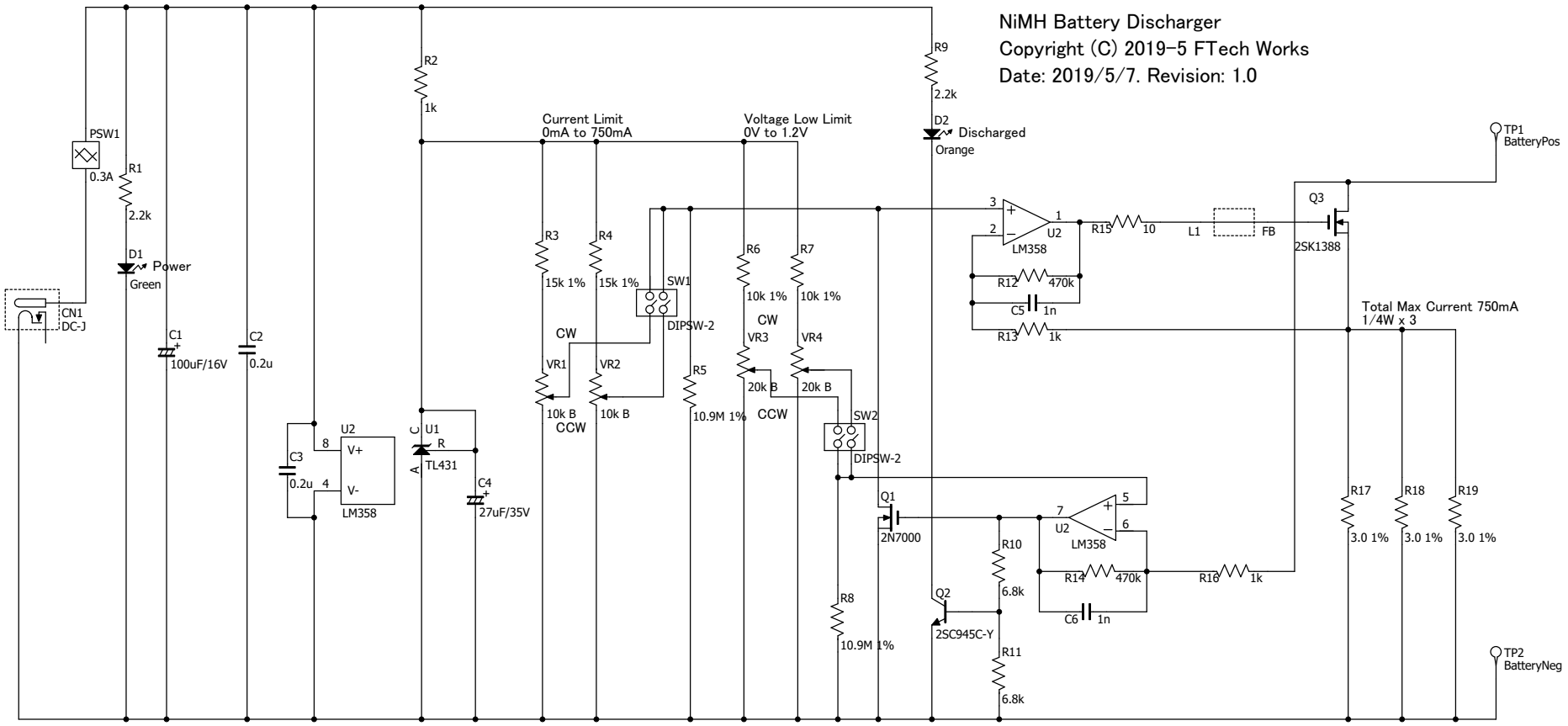
NiMH Battery Discharger
Copyright (C) 2019-5 FTech Works
Date: 2019/5/7. Revision: 1.0
PSW1
0.3A
R1
2.2k
D1
Power
Green
CN1
DC-J
C1
100uF/16V
C2
0.2u
C3
0.2u
U2
V+
V-
LM358
R2
1k
U1
TL431
C4
27uF/35V
Current Limit
0mA to 750mA
R3
15k 1%
R4
15k 1%
SW1
DIPSW-2
CW
VR1
VR2
10k B
CCW
R5
10.9M 1%
Voltage Low Limit
0V to 1.2V
R6
10k 1%
R7
10k 1%
VR3
VR4
20k B
SW2
R8
10.9M 1%
Q1
2N7000
Q2
2SC945C-Y
R9
2.2k
D2
Discharged
Orange
R10
6.8k
R11
6.8k
R12
470k
C5
1n
R13
1k
R14
470k
C6
1n
R15
10
L1
FB
Q3
2SK1388
R16
1k
TP1
BatteryPos
TP2
BatteryNeg
Total Max Current 750mA
1/4W x 3
R17
3.0 1%
R18
3.0 1%
R19
3.0 1%