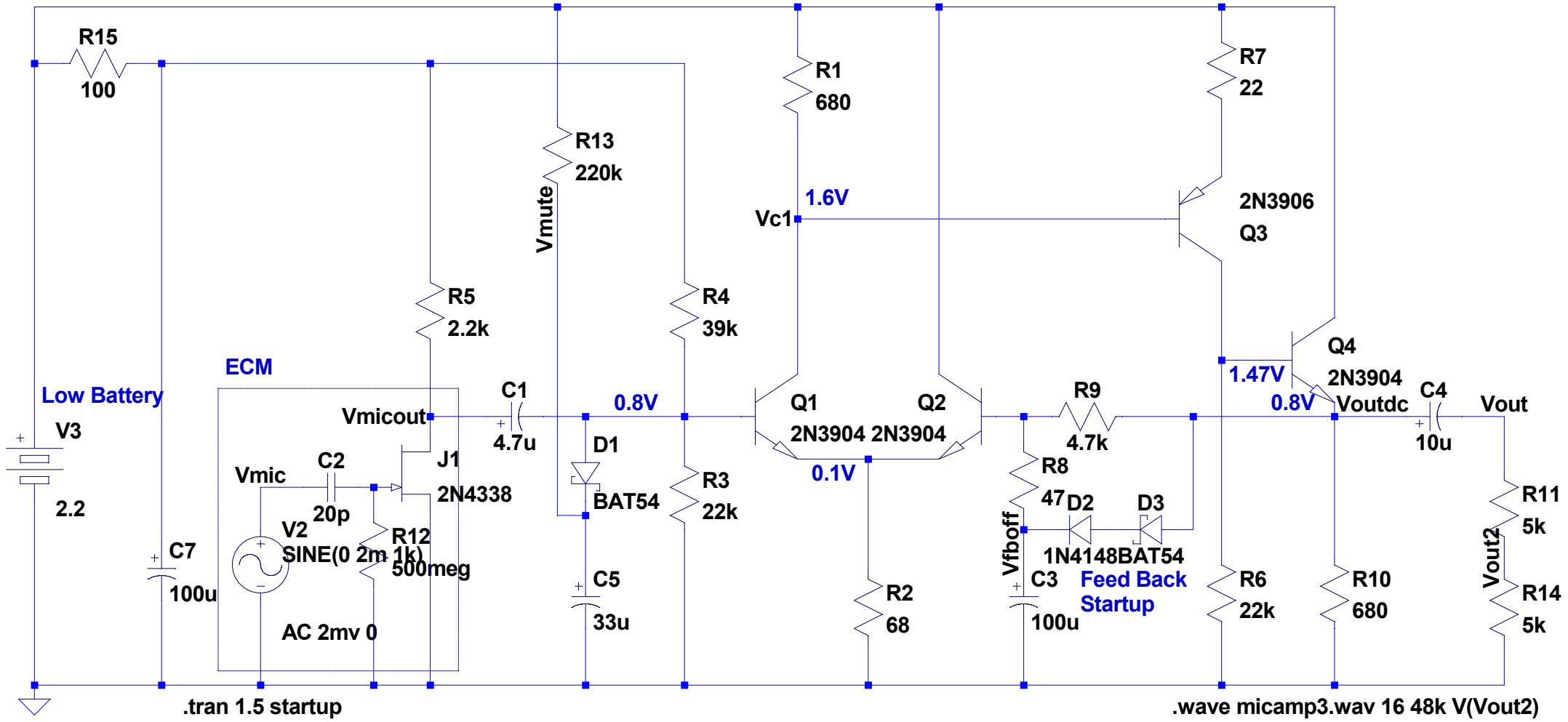

--- D:\bsch\micamp\micamp3.asc ---