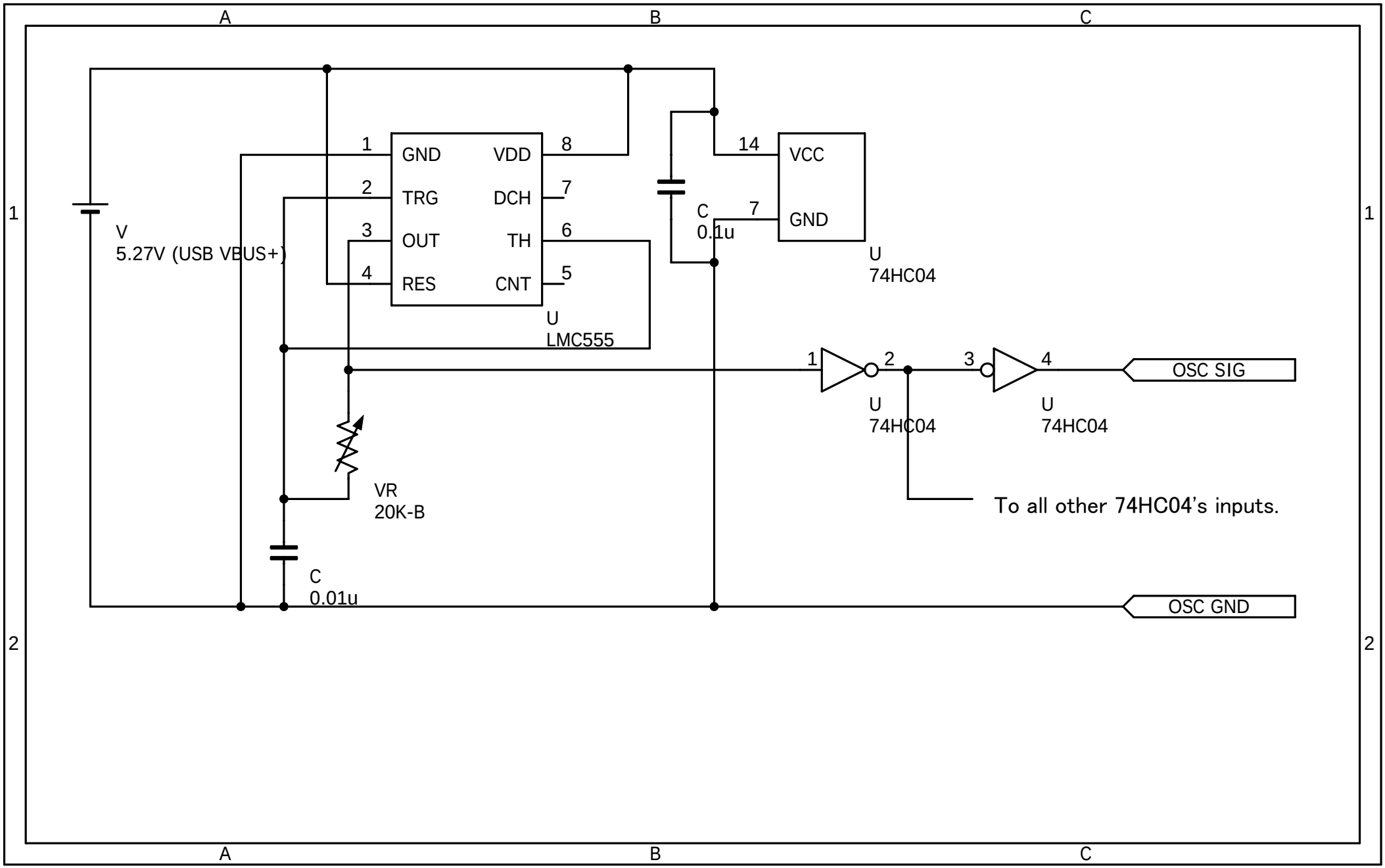
A
B
C
1
2
V
5.27V (USB VBUS+)
1
GND
2
TRG
3
OUT
4
RES
VDD
8
DCH
7
TH
6
CNT
5
U
LMC555
C
0.1u
14
VCC
7
GND
U
74HC04
1
2
3
4
U
74HC04
U
74HC04
OSC SIG
VR
20K-B
To all other 74HC04's inputs.
C
0.01u
OSC GND