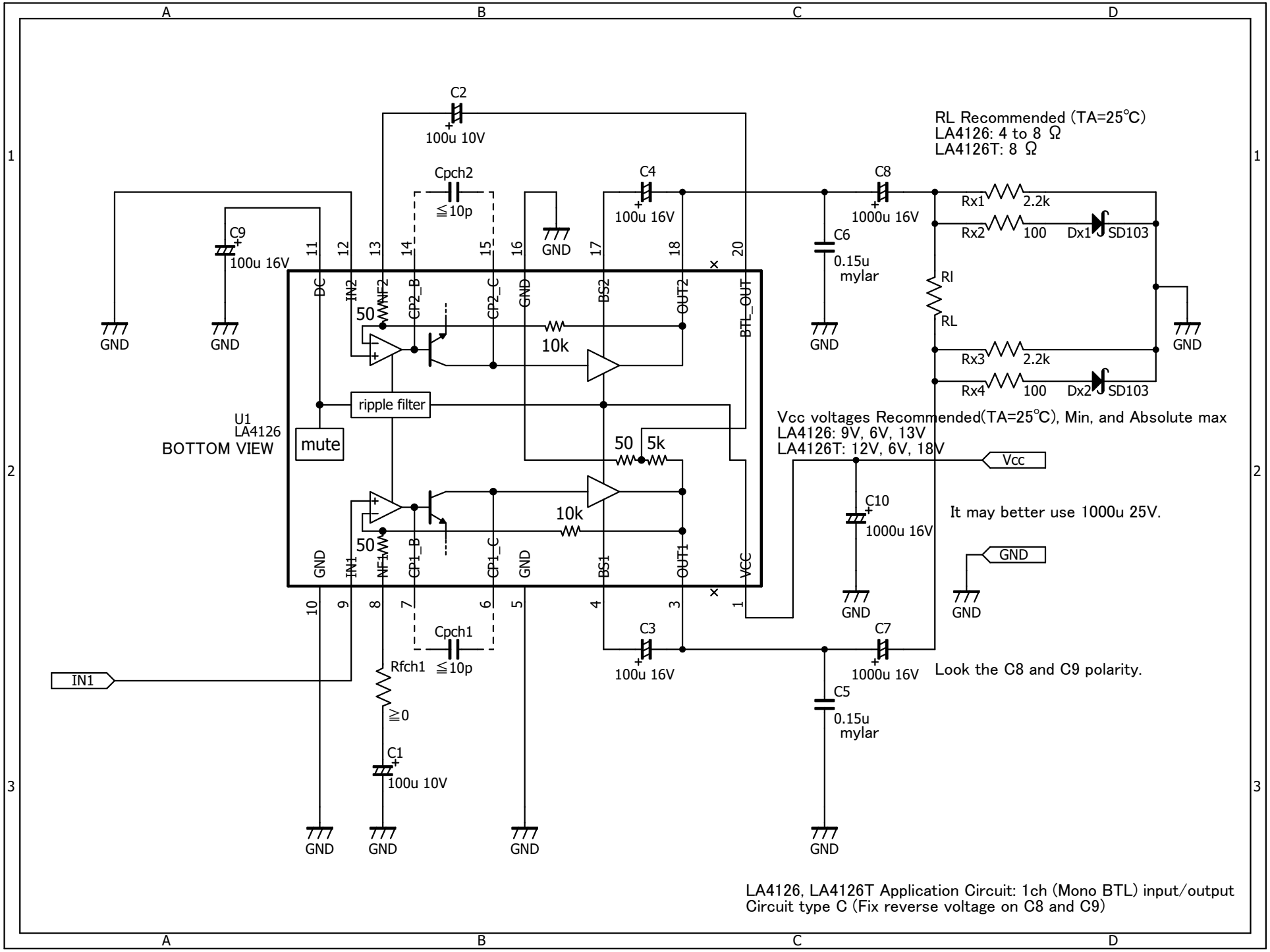

LA4126, LA4126T Application Circuit: 1ch (Mono BTL) input/output
Circuit type C (Fix reverse voltage on C8 and C9)