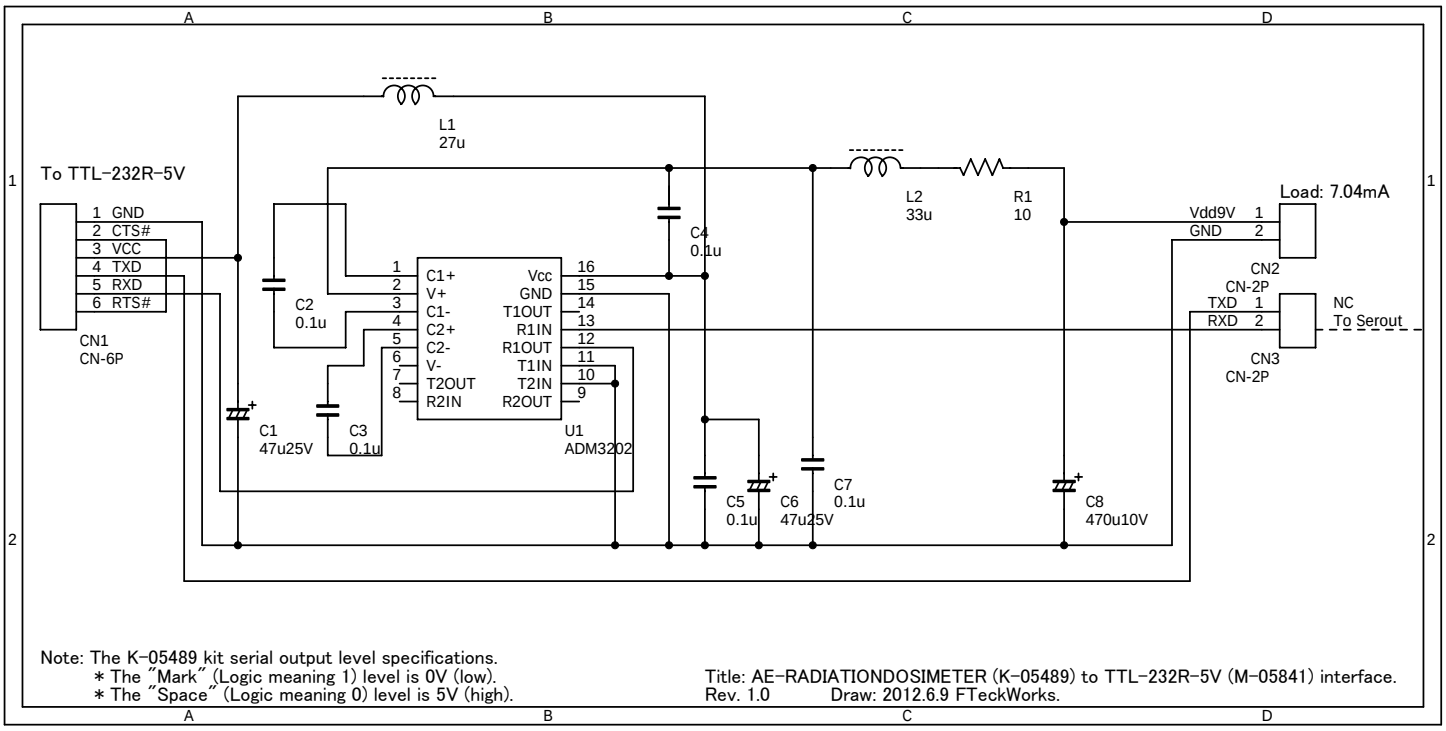

Note: The K-05489 kit serial output level specifications.
* The "Mark" (Logic meaning 1) level is 0V (low).
* The "Space" (Logic meaning 0) level is 5V (high).

Title: AE-RADIATIONDOSIMETER (K-05489) to TTL-232R-5V (M-05841) interface.
Rev. 1.0 Draw: 2012.6.9 FTeckWorks.