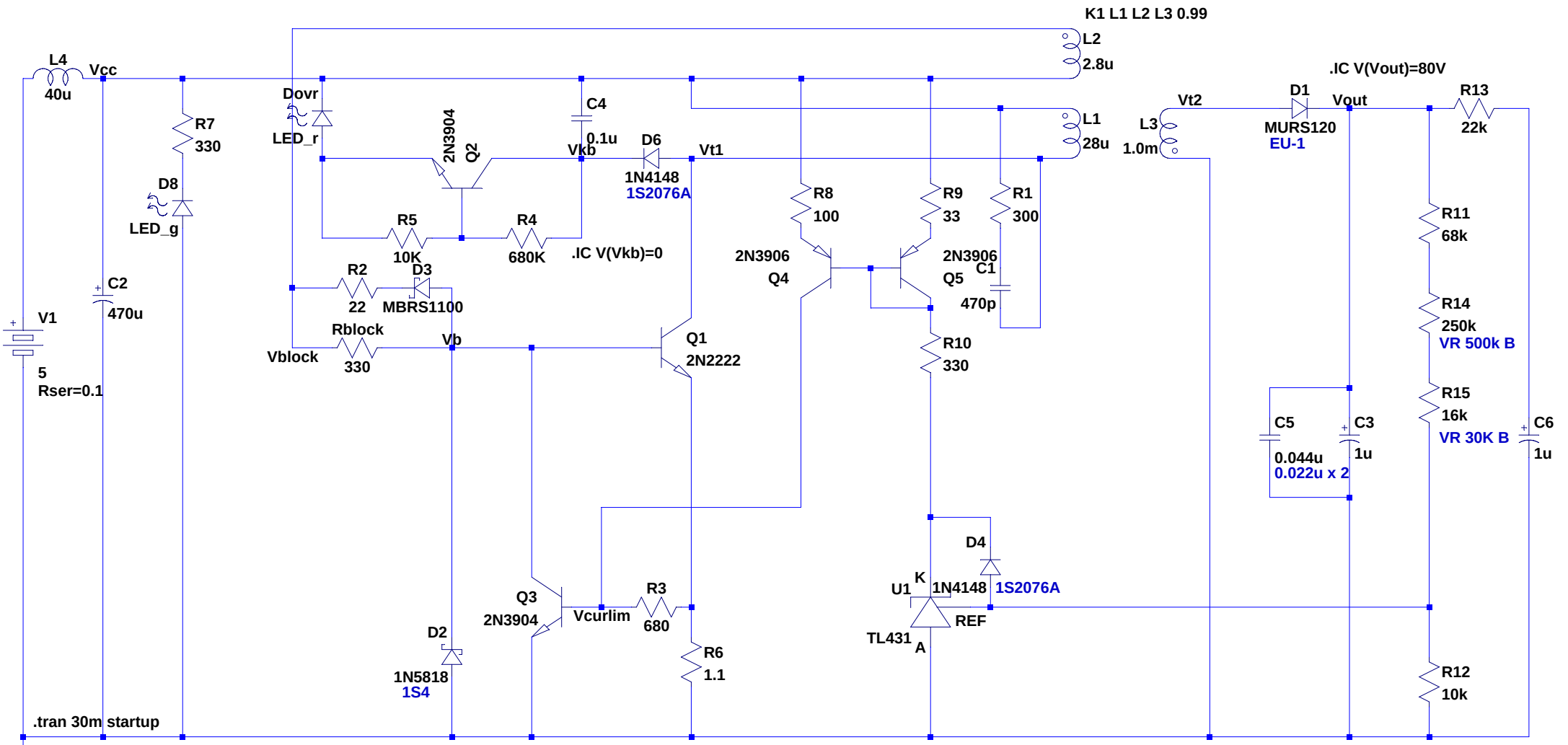

models from www.madlabo.com

.model LED_r D(IS=6.97e-15 N=2.35 RS=1.3772 BV=15.0 IBV=0.5uA CJO=38pF Vj=0.6323 M=0.323 Iave=0.02 Vpk=4 type=LED mfg=standard)
.model LED_g D(IS=7.33e-15 N=2.645 RS=1.472 BV=15.0 IBV=0.5uA CJO=19pF Vj=0.6323 M=0.322 Iave=0.02 Vpk=4 type=LED mfg=standard)

Transformer K1: Extracted From Akizuki Denshi AC Adaptor 6V 2A model NP12-1S0602.
Part number 300-0119

Transistor alternate table.
2N3904: 2SC2785H, 2SC1815GR
2N3906: 2SA1310S, 2SA1015GR
2N2222: 2SD1994AR, 2SC2235Y

Draw: FTechWorks 2011.5.6

--- D:\bsch\GMCounter\VrSup5.asc ---