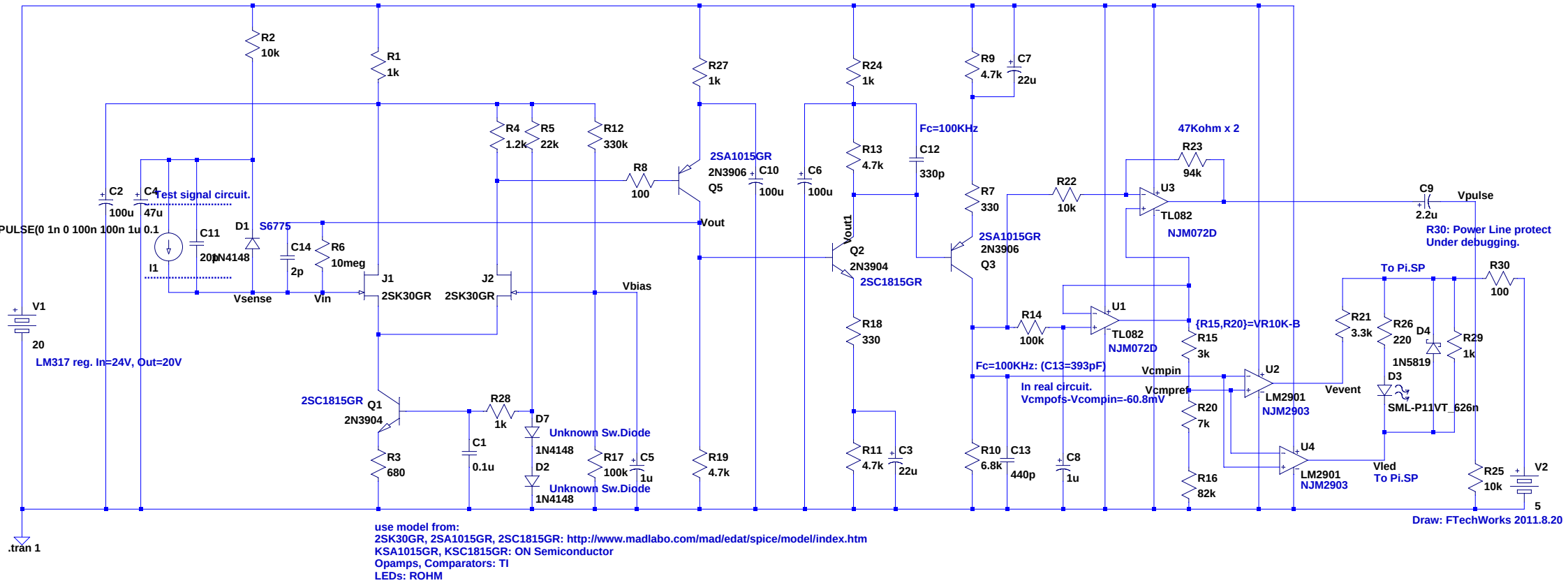

use model from:
2SK30GR, 2SA1015GR, 2SC1815GR: http://www.madlabo.com/mad/edat/spice/model/index.htm
KSA1015GR, KSC1815GR: ON Semiconductor
Opamps, Comparators: TI
LEDs: ROHM

--- D:\bsch\GMCounter\S6775SenseTr2Fix2.asc ---