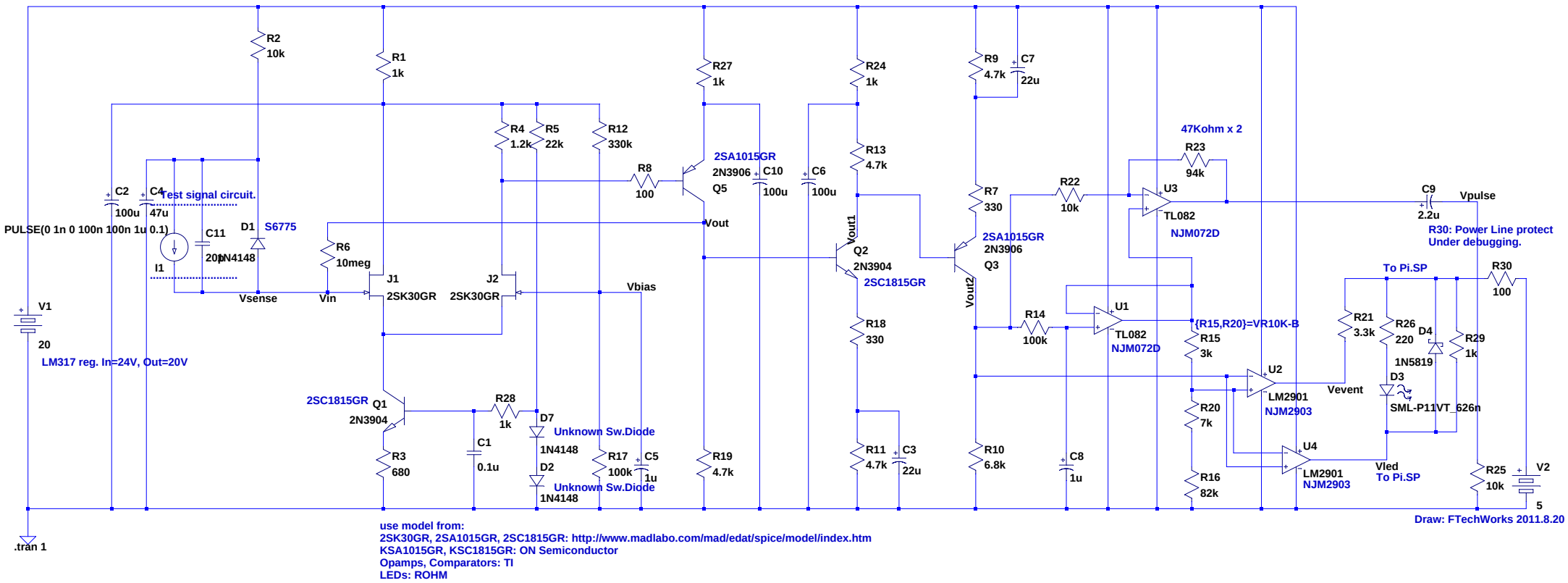

--- D:\bsch\GMCounter\S6775SenseTr2Fix1.asc ---