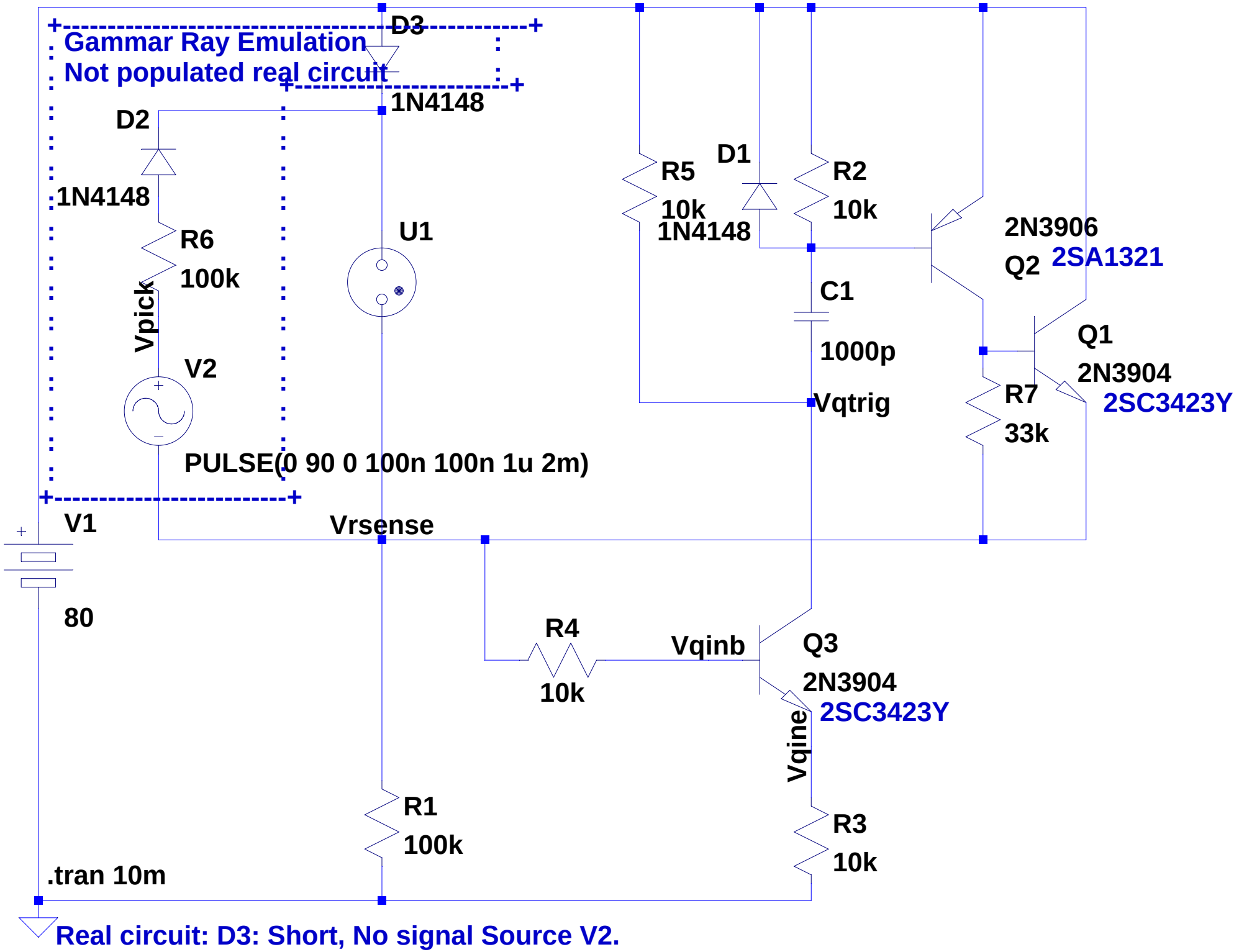
Gammar Ray Emulation
Not populated real circuit
D3
1N4148
D2
1N4148
R6
100k
Vpick
V2
PULSE(0 90 0 100n 100n 1u 2m)
U1
R5
10k
D1
1N4148
R2
10k
C1
1000p
Vqtrig
2N3906
Q2
2SA1321
Q1
2N3904
2SC3423Y
R7
33k
V1
80
Vrsense
R4
10k
Vqinb
Q3
2N3904
2SC3423Y
Vqine
R1
100k
R3
10k
.tran 10m
Real circuit: D3: Short, No signal Source V2.
--- D:\bsch\GMCounter\NIModel2.asc ---