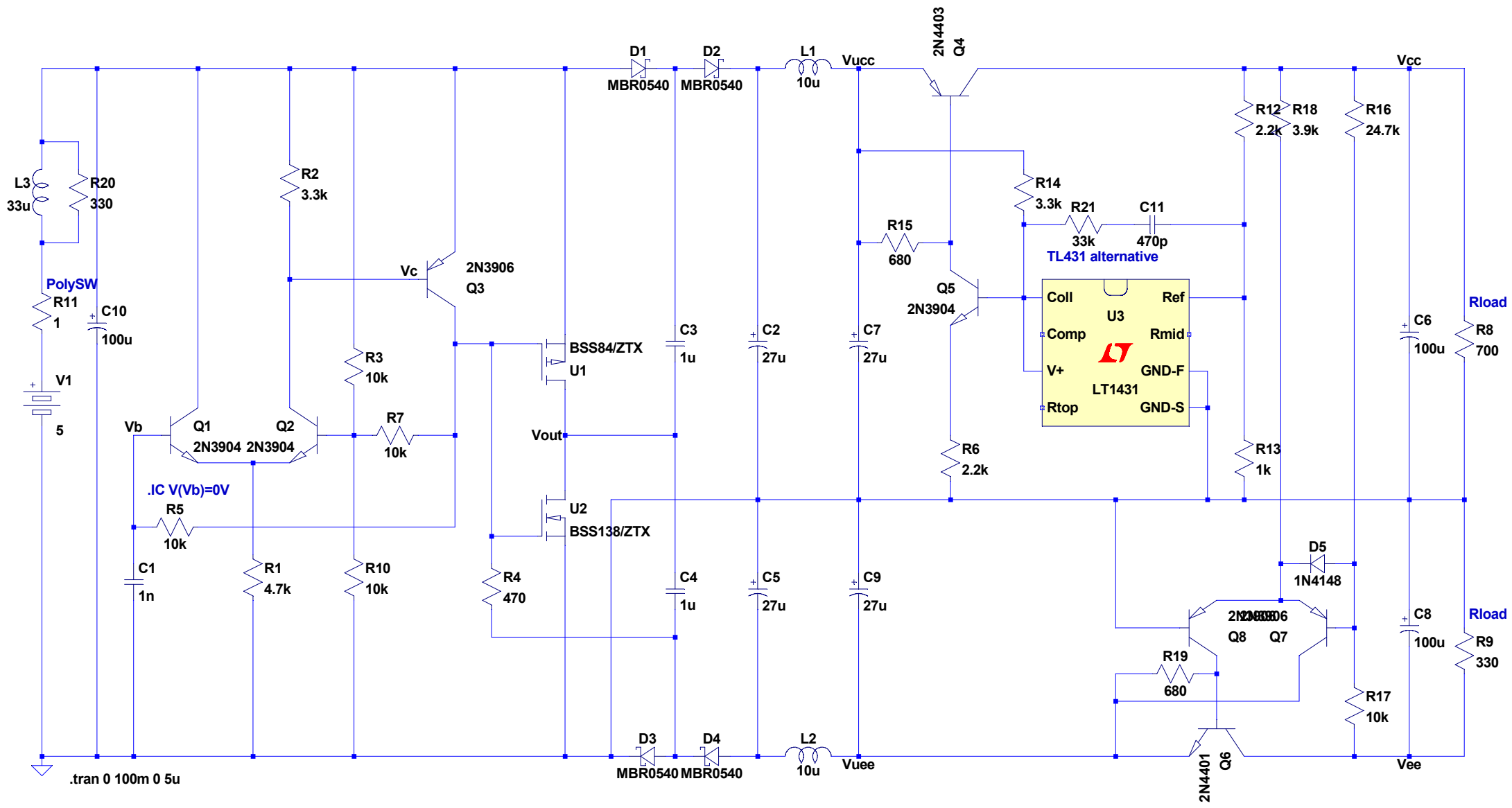

--- D:\bsch\BSS138\BSS84-BSS138\ChgPump5V0-3V2Fet-LT1431.asc ---