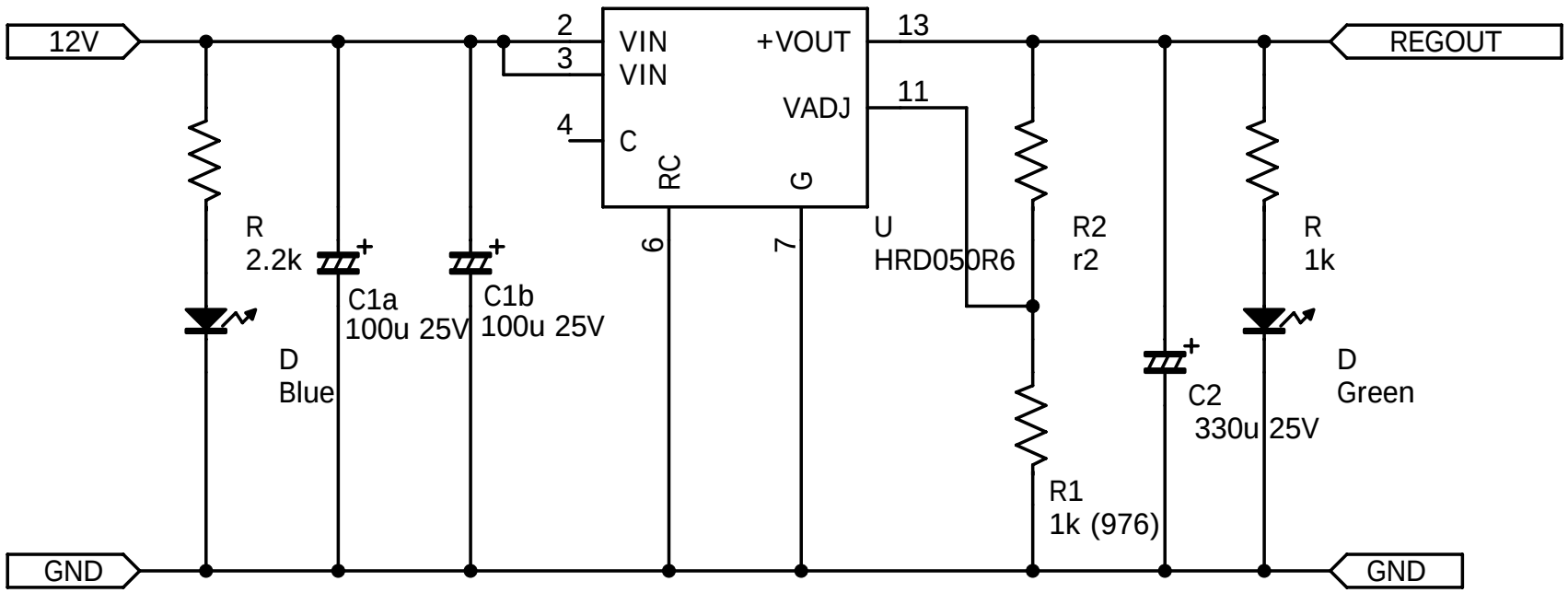

Table.1

r2(OHM)	REGOUT(V)	VADJ(V)
0.991k	5.038	2.501
2.179k	7.29	2.501
3.257k	8.83	2.502

R1=1k (976)

Resistance(OHM)
"+Vout" to "VADJ": 4.753k
"VADJ" to "G": 4.877k