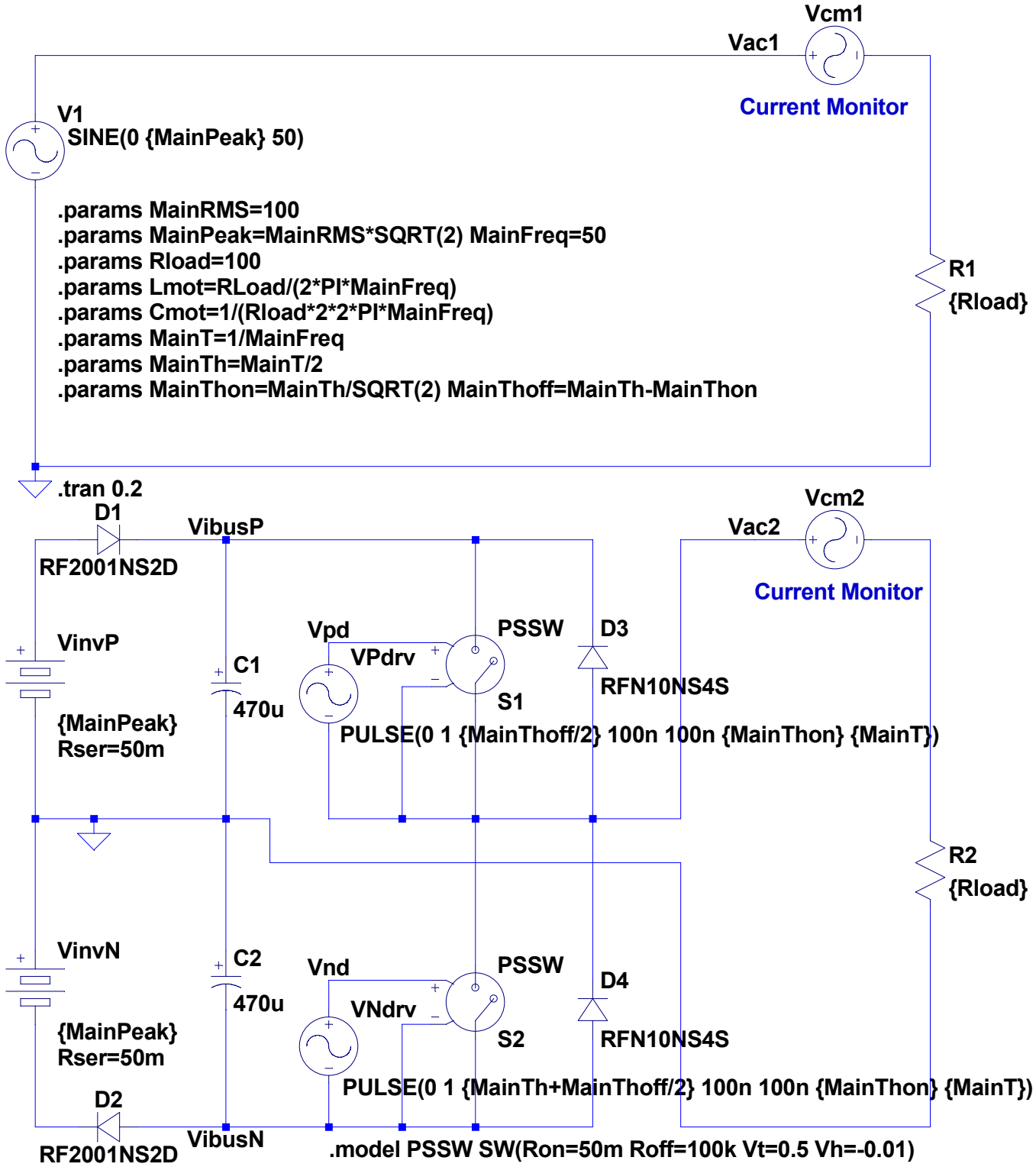

--- D:\bsch\DCACInvModel\DCACInvModelHB-RLoad.asc ---