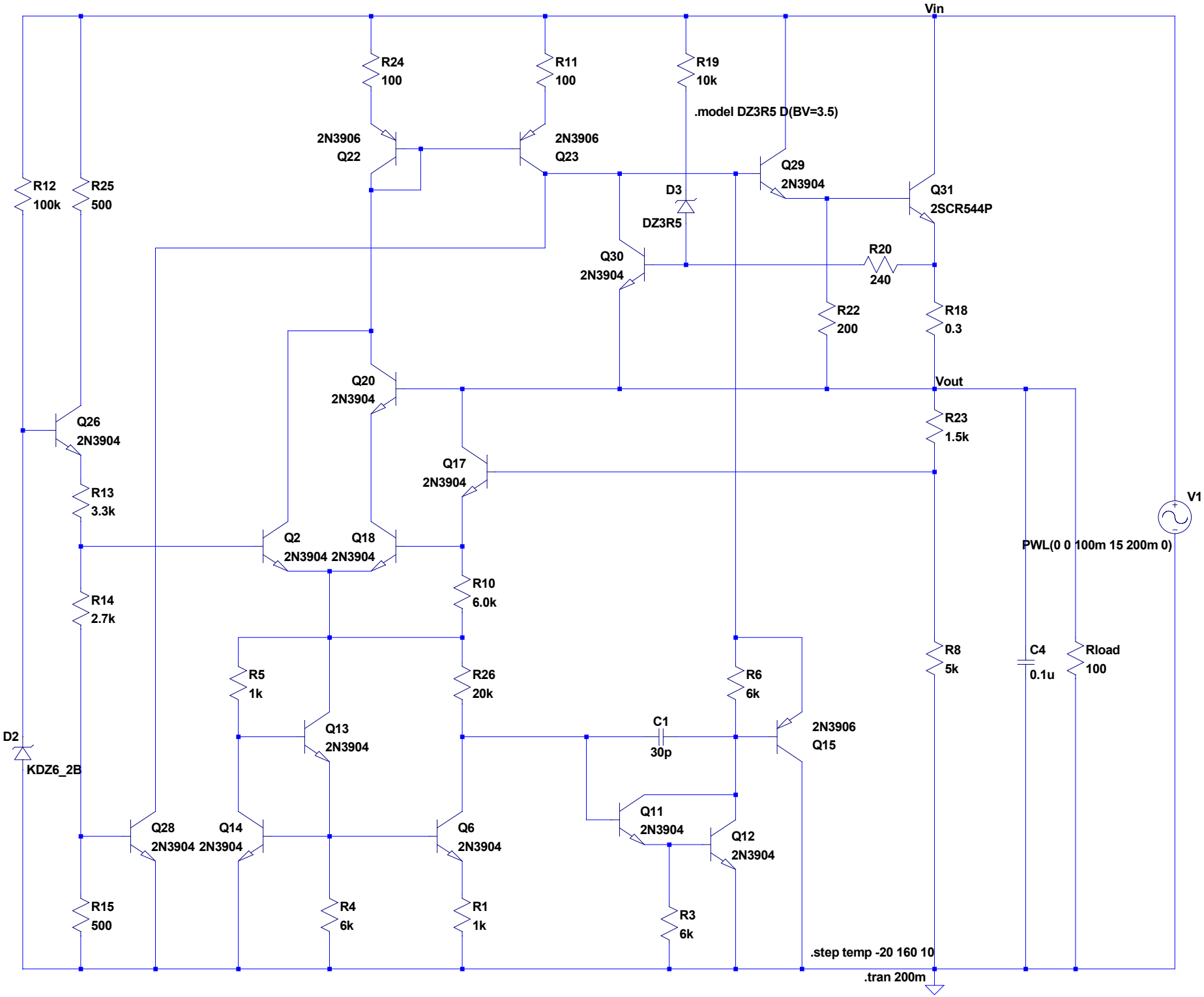

--- D:\bsch\MC7800\UA7800.asc ---